Part 2-D) Installation with Tsukayu adaptive brackets & plates assembly kit

(ii) Honda VT750 Shadow Aero

Two hardware kits are needed: a) Q-TSU802P adaptive brackets kit; b) Q-TSU802 bracket plates assembly kit

Fig. 2-D-(ii)-1

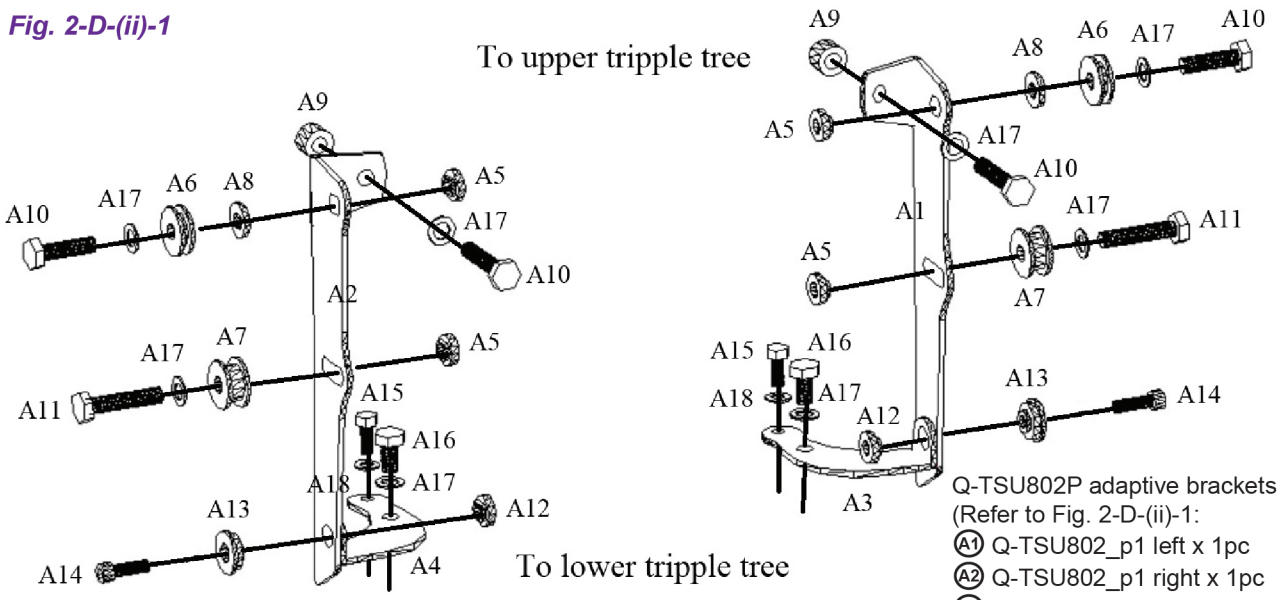

Q-TSU802P adaptive brackets kit includes
(Refer to Fig. 2-D-(ii)-1:

- (A1) Q-TSU802_p1 left x 1pc
- (A2) Q-TSU802_p1 right x 1pc
- (A3) TSU802_p2 left x 1pc
- (A4) TSU802_p2 right x 1pc
- (A5) M8-MS_NUT x 4pcs
- (A6) RK-7.6mm x 2pcs
- (A7) RK-12.6mm x 2pcs
- (A8) spacer 3mm(L) x8.5mm(I) x18mm(O) x 2pcs
- (A9) spacer 11.5mm(L) x8.5mm(I) x16mm(O) x 2pcs
- (A10) Bolt M8 x 30mm (hex head) x 4pcs
- (A11) Bolt M8 x 40mm (hex head) x 2pcs
- (A12) MS_NUT x 2pcs
- (A13) MS1_ver3 spacers x 2pcs
- (A14) Bolt M6 x 20mm (round head) x 2pcs
- (A15) Bolt M6 x 15mm (hex head) x 2pcs
- (A16) Bolt M8 x 15mm (hex head) x 2pcs
- (A17) M8 washers x 4pcs
- (A18) M6 washers x 2pcs

Fig. 2-D-(ii)-2

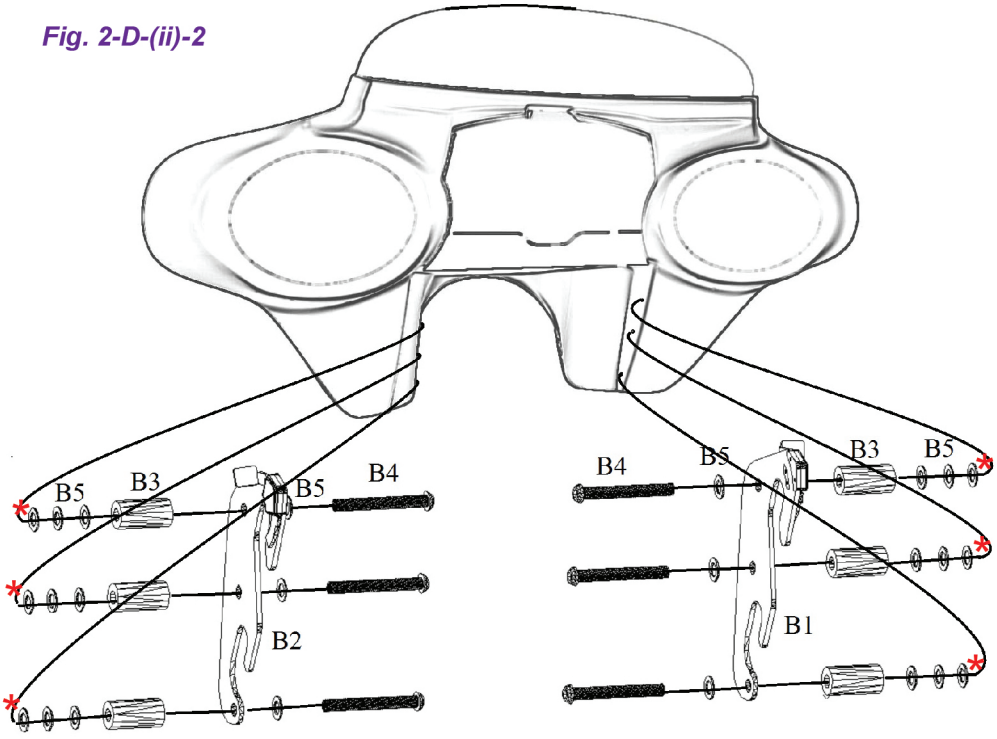

*Note: Refer to Step 3

Q-TSU802 bracket plates kit includes
(Refer to Fig. 2-D-(ii)-2)

- (B1) Q-TSU802 left x 1pc
- (B2) Q-TSU802 right x 1pc
- (B3) spacer 35mm(L) x8.5mm(I) x18mm(O) x 6pcs
- (B4) Bolt M8 x 50mm (hex head) x 6pcs
- (B5) additional M8 washers (use if necessary)

1. Cover gas tank and front fender with protective material.

2. Install the Q-TSU802p bracket assembly as shown in Fig.2-D-(ii)-1, the turn signal bar should be removed temporarily (turn signal bar is not shown in the figure). Measure the distance between the slots on left and right quick release latches, this distance will be used to adjust the distance between the bracket plates on fairing, you need to measure it as accurate as possible, we suggest measuring in mm.

*3. Install the mounting plates assembly as shown in Fig.2-D-(ii)-2. Add M8 washers if the distance of the two mounting plates doesn't perfectly match the distance between the two slots of Q-TSU802p. The spacers provided are close to what you need, but you may still need to add washers until they perfectly match, make sure you use same number of spacers and washers for all holes. Don't mix up Left and Right bracket plates, the latches come with the bracket plates. Try to put the fairing on, normally you will need to modify the number of washers several times until they match.

4. Now put the fairing on, you may need a helper for doing this step easier. Make sure the bracket plates are tightened securely. Latch the both side bracket plates securely. Tighten all the bolts on the fairing and all bolts on the whole mounting system.

Copyright © Tsukayu - All rights reserved